CITEL

LSCM-D

User Manual

Smart SPD Monitoring Device
Surge Current Counter

N210201 - This document could be modified without notice. Update available on website.

SAFETY INSTRUCTIONS

- Installation must be performed only by electrically skilled operator.
- National electrical installation rules must be followed.
- The unit must be used only as surge current counter & SPD monitoring, according the conditions described in this document.

P1/6 Introduction

P7/10 Installation

P11/17
OLED Instructions

P18/29
Modbus Protocol

1 - Introduction

1-1 Overview: LSCM-D

As we know, surge voltages caused by lightning strikes can lead to severe damages and destructions to power and signaling networks, such as common buildings, new energy plant structures like wind turbines. SPDs (Surge Protective Devices) are currently used to tackle this important threat.
The monitoring of the SPDs is critical point for 2 reasons :

• Estimating the surge stress applied to the SPDs, for prostective maintenance (SPD replacement before failure) and possible upgrade the surge protection strategy (increase the discharge current of the installed SPD because too heavy or too frequent surges). For this, the timing, location and current amplitude of the surge events must be known.

• Knowing the status (operating/disconnected) of Surge Protection Branch (SPD + associated disconnectors e.g.MCB, fuse) and transmission on this information remotely.

The Solution :

The smart monitoring and measuring device LSCM-D is designed for measuring the surge current which will flow in the Surge protection branch and for indicating the the status of the SPD and and its associated disconnectors .

The product LSCM-D is composed of one sensor and one monitoring unit, detailed combinations are described as below table.

Type	Description	Version
LSCM-D/24	Monitoring unit	12-24 Vdc/ac Power Supply
LSCM-D/230AC	Monitoring unit	120-230 Vac Power Supply
LSCM-P300	Surge sensor	300 A minimum surge detection
LSCM-P1000	Surge sensor	1000 A minimum surge detection
LSCM-D/24/P300	Complete set: 1 monitoring unit+1 sensor	12-24 Vdc/ac Power Supply + 300 A minimum detection
LSCM-D/230AC/P300	Complete set: 1 monitoring unit+1 sensor	120-230 Vac Power Supply + 300 A minimum detection
LSCM-D/24/P1000	Complete set: 1 monitoring unit+1 sensor	12-24 Vdc/ac Power Supply + 1000 A minimum detection
LSCM-D/230AC/P1000	Complete set: 1 monitoring unit+1 sensor	120-230 Vac Power Supply + 1000 A minimum detection

1-2 Main functions

The main funcitons for LSCM-D described as below :

▪ Lightning and surge current detection for wide detection range :

- 0.3/25kA@10/350μs or 0.3/50kA @ 8/20μs(LSCM-P300)
- 1.0/50kA@10/350μs or 1.0/100kA @ 8/20μs(LSCM-P1000)

▪ Front OLED display can read recorded events and device parameters

▪ Peak current and time stamping recording of the surge events

▪ RS485 communication interface/MODBUS protocol

▪ Monitor connected devices: with two inputs and one output switch signal, the status of SPD and/or backup protection can be monitored.

▪ Equipped with rechargeable 3 V battery, which can keep the clock running in case of power loss, to ensure the accuracy of recording time;

▪ Equipped with an LED indicator light can indicate the working status of the equipment.

CITEL Range	LSCM		
Application	Detect and record surge & lightning currents and monitor the SPD status		
Range of lightning current detection	P1000 version: 1-100 kA (8/20μs), 1-50 kA (10/350μs) P300 version: 0.3-50 kA (8/20μs), 0.3-25 kA (10/350μs)		
Input/output	Two channels of input switching signal and one channel of output switching signal		
Communication	RS485 bus (MODBUS protocol)		
Power supply	24 Vdc/ 24 Vac (LSCM-D/24) or 120/230 Vac (LSCM-D/230AC)		
Built-in battery(data saving) life	3-6 months, rechargeable		
Error and pricision (peak value)	0.1 kA ; +/- 5%		
Display module	128*64 lattice OLED display, green/red status LED display		
CITEL model	**LSCM-D/****	**LSCM-P1000**	**LSCM-P300**
Description	Monitoring unit	1 kA sensor	0.3 kA sensor
Dimensions	See diagram	See diagram	See diagram
Weight	130 g	40 g (with 1m wire)	40 g (with 1m wire)
Mounting	Symmetrical DIN rail 35 mm(EN60715)	2*M3 bolts	2*M3 bolts
Operating temperature	-25/+70°C	-25/+70°C	-25/+70°C
Storage temperature	-20/+60°C	-20/+60°C	-20/+60°C
Protection rating	IP20	IP20	IP20
Housing material	Thermoplastic UL94 V-0	Thermoplastic UL94 V-0	Thermoplastic UL94 V-0
Connection wire	Not provided	Coaxial cable AWG26	Coaxial cable AWG26
Ground connection	Two connection PE ports	NA	NA
Terminal connection	Spring-cage terminals	Wire connection	Wire connection

1-3 Technology and features

1-3-1 Technology

This measuring system utilizes Faraday effects to analyze the surge currents which pass through conductors when discharge happens. The measured electric signals caused by electromagnetic effects is generated in the coil sensor, and will be transfered into differential voltage signal to monitoring unit through sensor's connection wire, then the controlling unit proceed further back calculation by microprocessor.

The data acquisition system for incoming surges consists of signal conditioning circuit, DSK interfacing circuit, RS-485 communication interfacing circuit, system clock circuit, power supply circuit and so on. System schematic diagram Fig 1.

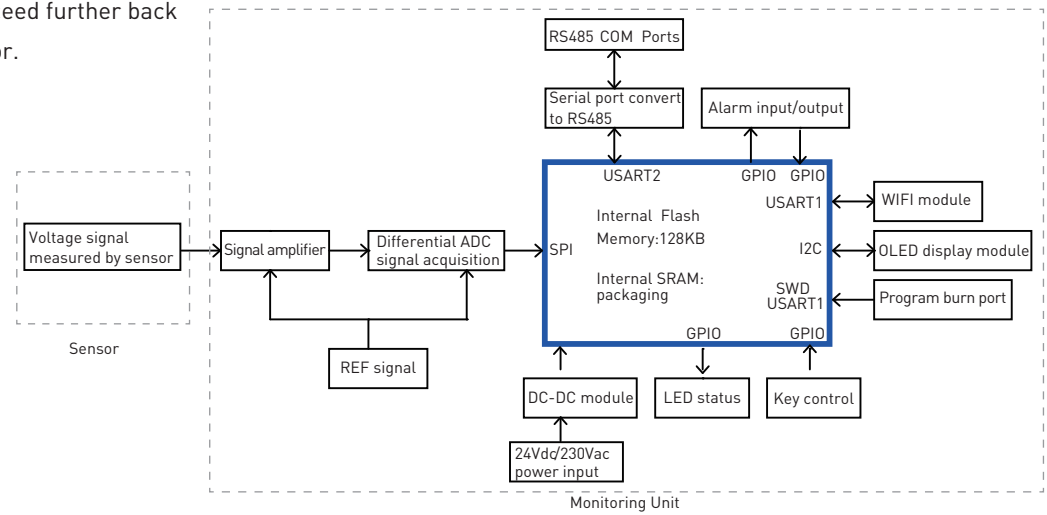

Fig1. LSCM-D system schematic diagram

1-3-2 Main features

▪ Surge current detection

The peak value and polarity of surge currents flowing conductors, including PE wires or down conductor, as well as the time stamping for the event are recorded. Long (10/350μs) and shorter (8/20μs) duration impulse currents can be monitored with wide range (range described as 1 -2).

▪ Monitor the state of the SPD and its associated disconnectors (operating/disconnected)

This information will send through the communication line or will operate a contact (output port) to activate a LED indicator, or a buzzer, or a contactor to cut down the main circuit (Fig4).

▪ With high precision

The accuracy rate for LSCM-D can declare within +/-5%. The precision could reach better performance in low electromagnetic interference conditions.

▪ Wide operating voltage range

The power supply is equipped with rectifying bridge, which can support DC and AC wide voltage range input, and applicable for reverse wiring, two versions optional:

- DC power supply: 12-24Vdc/ac (DC:9Vdc min/36Vdc max; AC:6Vac min/30Vac max)
- AC power supply: 120-230Vac (90Vac min/264Vac max)

▪ Information display and communication

- Local information: the front OLED display gives access the recorded information (surge parameters, devices status)
- Remote signal communication: a remote computer, through RS485 communication/Modbuis protocol to the LSCM-D, can access to the full recorded data.

▪ Higher immunity to interference

LSCM-D have passed strict tests on EMC and EMI, comply with the standard requirements on IEC 61000 and CISPR. LSCM-D have passed the EMC tests and have got the qualified test report from professional third party laboratory.

▪ Built-in battery for timer

To ensure the accuracy of recording timethe monitoring device equipped with rechargeable 3V battery which can keep the timer running in case of power loss the battery life could reach 3-6 months.

▪ Wide applicability

Based on the compact design and wide surge detection range for 10/350μs and 8/20μs, LSCM-D typically can be used for:

- Detect the surge current via SPD PE wire inside an electrical cabinet
- Monitor the state of SPD and/or of its associated disconnector (fuse/MCB)
- Detect the lightning current flowing PE wire from blade to the hub in windturbine.
- Detect the direct lightning strike from LPS through down conductor or grounding wire.

2- Installation

2-1 Mechanical scheme

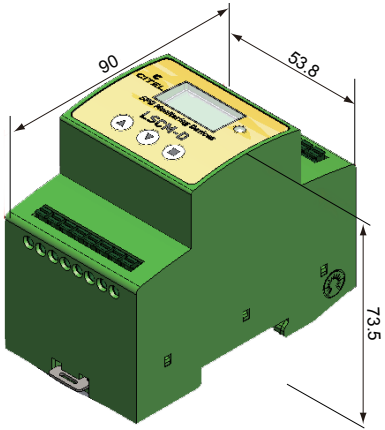

Monitoring unit LSCM-D

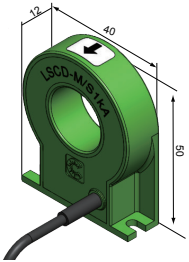

Sensor LSCM-P1000

Fig2. Mechanical scheme for LSCM-D

2-2 Interface introduction

2-2-1 Power supply

The applicable voltage for power supply is 12-24 Vdc/ac or 120-230Vac (two different versions) (please refer to 1-3-2).

2-2-2 RS485 ports

RS485 ports is designed for communicating with remote computer to transmit the detecting data and monitoring instructions : this system uses half-duplex communication by the way of Modbus transmission protocol. RS485 communication cable in general is using twisted pair, but under the high requirement of environment suggest to use shielded twisted pair cables, to achieve perfect performance of anti-interference.

2-2-3 Sensor

LSCM-D equipped with dedicated coil sensor for surge measuring : two versions ar available for different detection range. The sensor should be mounted around the discharge conductors as fig4 shows. The connection wire (default configuration) should connect to monitoring unit.

2-2-4 Switching signal-Alarm inputs

The device is equipped with two alarm input ports for monitoring the switching state from SPD and/or disconnectors. The received switching state information will transfer to the alarm output port and remote computer through RS485 in real time. Tthe “alarm” process can be triggered by setting the fault state for each input ports.

2-2-5 Alarm output

Output port is designed for trigger the "alarm" process like LED/buzzer/-contactor. The output signal status totally depends on the input signal status. The maximum operating voltage and current for output ports is 350Vdc & 120mA.

2-2-6 PE shield connection

The monitoring device should connect to the earthing system with each one of the two SH ports (Shield) . By this way, the system immunity for LSCM-D can be increased and the common interference through RS485 can be reduced, so an higher measurement accuracy can be ensured.

Instructions:

Follow the test requirements, all cables length should less than or euqal to 3 meters.

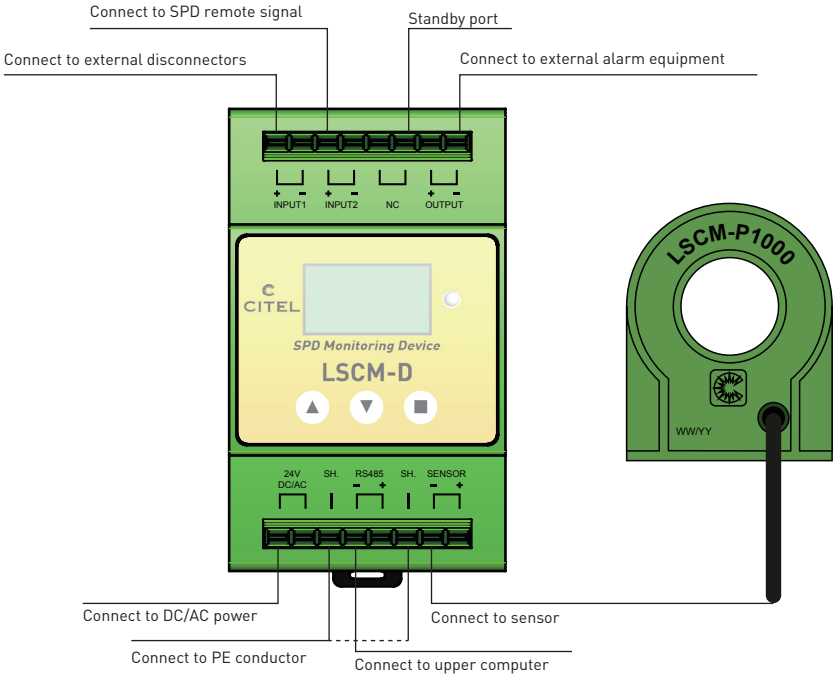

Fig3. LSCM-D connection

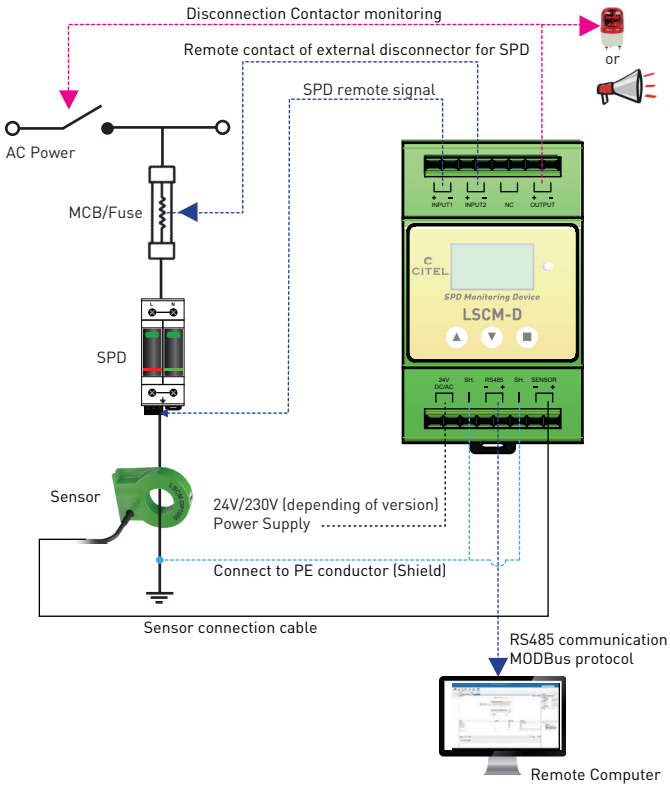

Fig4. Typical wiring diagram for LSCM-D

2-3 Typical wiring diagram for LSCM-D

- Symmetrical DIN rail mounting
- Connection terminal : spring contact -1.5 mm² wire max
- Operating/storage temperature : -25/+70 °C
- Protection rating : IP20
- Weight: 170g
- Maximum acceptable conductor diameter for sensor: 19mm

*Note: 1) two input ports are totally identical, so the wiring can be reversed.
2) the monitoring unit should keep power off when wiring : using this way can avoid triggering by accident due to signal interference and other factors.

3-OLED Instructions

3-1 Main operator panel

Monitoring unit equipped with one 128×64 OLED display screen and three operating buttons like below, buttons from left to right are defined as"▲▼■"respectively.

The main interface for OLED can be divided into four main operator interfaces (3-2) and two system setting interface (3-3).

Buttons ▲▼ are used for pages switching between the main interface. Button ■ is used for selection or confirmation .

After pressing Button ■ for 5 seconds, the screem can access the system setting interface and proceed to set system parameters.

3-2 Main operator interfaces

3-2-1 First page : basic information

The first interface displays basic information for LSCM-D, including manufacturer name, device designation, real-time clock time and date.

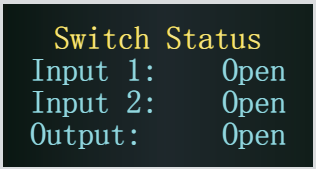

3-2-2 Second page : switch status

The second page displays disconnectors' state, two input ports can display the real time state for the connecting disconnectors like fuses or MCBs, and the output port state can be set by modbus communication(4-3-1) according to different state of input ports.

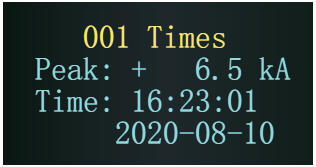

3-2-3 Third page : Surge current information

The third page is the interface about surge current information. Press button ■ can access this page and detailled the recorded detected data (the latest 1200 surge events). It contains the polarity and peak value of lightning current, the time and the sequence number. Button ▲▼ can switchover each surge events, press button ■ can exit the query page.

3-2-4 Fourth page : Status information of the system

The fourth page displays the equipment information. Press button■ will display the current user device address(user-defined) and RS485 communication baud rate.

Press ■ again will access next page, the device serial number and software version can be queried in this page.

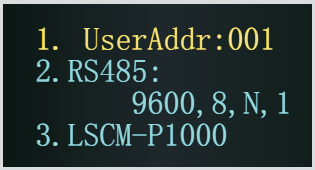

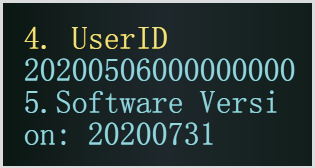

3-3 System settings

3-3-1 Settings introduction

System setup is mainly used to set up system information, such as RS485 communication baud rate, user device address, languages settings. Press the function button ■ more than 5 seconds can access the first system settings page, press button ▲▼ can move the cursor in this page.

There are two pages for system setting.

- The first page as 3-3-2 described, RS485 baud rate (default 9600 baud), user-defined device address and language can be set at this page.
- The second page as 3-3-3 described, the type of sensor can be selected between LSCM-P300 or LSCM-P1000, the real time and clear record can be set too.

3-3-2 First page : System settings

▪ **RS485 baud rate**

After access the interface of RS485 baud rate selection, then move the cursor by button ▲ and ▼ to choose the appropriate baud rate, then press button ■ to confirm the selection.

▪ User address

By using buttons ▲ ▼can modify LSCM-D communication address with upper computer, and use button ■ to confirm code setting.

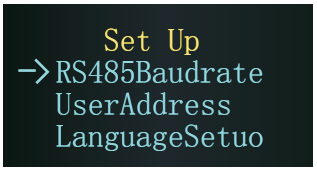

▪ **Language setup**

Setting language, use buttons ▲ and ▼ can modify the optional language for English and simplified Chinese, and use button ■ to confirm the change.

▪ If continue to press ▼, the second page for system settings as 3-2-3 will display.

3-3-3 Second page : System settings

▪ Time setup

After access the second system setting page, press button ■ to enter the year setting, and use buttons▲and▼to switch the year value. Month, date and time setup take similar way.The time can be set by the means of time synchronization with upper computer, more simpleand fast than the button way.

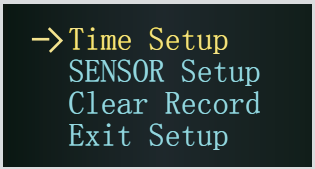

▪ Sensor setup

After access the sensor setting interface, press button ■ to enter the selection bar, the sensor type LSCM-P300 and LSCM-P1000 can be selected by button ▲ and ▼.

After select the sensor, the lightning detection range also can been set too, take LSCM-D/24/P1000 for example, three option "1kA-100-kA", "2kA-100kA" and "4kA-100kA" optional, the range option depend on the application requirements.

Be careful, if choose wrong sensor type, the measured value is unreliable.

▪ Clear record

If user want to clear all history record, first move the cursor to "clear record" option, then press button ■ to confirm the selection.

Be careful, if the record is cleared, all the data can not recovered.

When all setting finished, move the cursor to "exit setup" option, then press button ■ to exit.

4- Modbus Protocol

4-1 Introduction

4-1-1 About Modbus protocol

Modbus is a very commonly used communication protocol and communication convention in industry. Modbus protocol includes RTU, ASCII and TCP type, and Modbus-RTU is the most commonly used, relatively simple, and can be easily implemented on single chip microcomputer.

Through Modbus protocol, controllers can communicate with each other through network, such as Ethernet, and with other devices. Modbus has become a universal industry standard and with it, control equipment produced by different manufacturers can be connected into an industrial network for centralized monitoring. Controller communication uses master-slave technology, that is, only one device (master device) can initiate the transport (query). Other devices (slave devices) respond accordingly to the data provided by the master device query. The master device can communicate with the slave device alone or broadcast with all slave devices.

4-1-2 How to realize Modbus protocol

Master device communicate with LSCM-D through Modbus-RTU by RS485, the transmission medium use shielded twisted pair. Modbus RTU messages are a simple 16-bit structure with a CRC (Cyclic-Redundant Checksum). This protocol primarily uses an RS-232 or RS-485 serial interfaces for communications and is supported by almost every commercial SCADA, HMI, OPC Server and data acquisition software program in the marketplace. This makes it very easy to integrate Modbus compatible equipment into new or existing monitoring and control applications.

The user should selects the desired RTU mode in the controller for LSCM-D device, including the serial communication parameters (baud rate, calibration mode, etc.).

When configuring each controller, all devices on a Modbus network must select the same transmission mode and serial port parameters.

The Modbus protocol establishes the format of the master device query: device address, functional code, all data to be sent, and an error detection field. The response message from LSCM-D also consists of the Modbus protocol, including the domain to confirm the action, any data to return, and an error detection domain. If an error occurs during message receiving, or if the slave device is unable to execute its command, the slave device creates an error message and sends it back.

Device Adress	Function code	Data field	Data 1	.....	Data n	CRC check high byte	CRC check low byte

▪ Device address

RTU mode address field of a message frame contains eight bits. The possible address from the device is 0...247 (decimal), and the address range of a single device is 1...247. When a response message is sent from a device, it puts its address into the address field of the response so that the master device knows which device is responding.

▪ Function code

RTU mode functional code field in the message frame contains 8 bits. The possible code range is decimal 1...255. When a message is sent from the master device to the slave device, the functional code field tells the slave device what behavior it needs to perform. For example, to read the switching state of the input, to read the data content of a set of registers, to read the diagnostic status of the slave device, to allow the input, record, verify the program in the slave device, etc.

▪ Data field

Data field is composed of two sets of hexadecimal numbers, with a range of 00...FF. A pair of an RTU character sent from the master to the slave devices contain additional information: the slave devices must be used to perform what is defined by the functional code. This includes things like discontinuous register addresses, the number of items to process, and the actual number of bytes of data in the field.

▪ CRC check

The RTU mode is selected as the character frame, and the error detection field contains a 16 bits value (implemented with two 8-bit characters).The content of the error detection domain is obtained by looping verbose detection of the message content. The CRC is appended to the end of the message and is added first in low bytes and then in high bytes, therefore, the high byte of CRC is the last byte to send a message.

4-2 Read device information

4-2-1 Read the status of input/output ports

Query	
01	Slave address
03	Function
00	Starting address Hi
00	Starting address Lo
001	No. register number Hi
01	No. register number Lo
84	CRC check Lo
0A	CRC check Hi

Response	
01	Slave address
03	Function
02	Byte count
00	Data Hi
xx(1)	Data Lo
xx	CRC check Lo
xx	CRC check Hi

(1) 00 means the state of input1 is open, input2 is open.
01 means the state of input1 is open, input2 is close.
10 means the state of input1 is close, input2 is open.
11 means the state of input1 is close, input2 is close.

4-2-2 Read device time

Query

01	Slave address
03	Function
01	Starting address Hi
00	Starting address Lo
00	No. register number Hi
04	No. register number Lo
45	CRC check Hi
F5	RC check Lo

Response

01	Slave address	xx	inute
03	Function	xx	Second
08	Byte count	xx	Covering position
xx	Year Hi	xx	CRC check Lo
xx	Year Lo	00	CRC check Hi
xx	Month		
xx	Date		
xx	Hour		

4-2-3 Read the total times of lightning trigger and input ports trigger

Query	
01	Slave address
03	Function
02	Starting address Hi
00	Starting address Lo
00	No. register number Hi
03	No. register number Lo
xx	CRC check Lo
xx	CRC check Hi

Response			
01	Slave address	xx	Input 2 port total number Lo
03	Function	xx	CRC check Lo
06	Byte count	xx	CRC check Hi
xx	Lightning strike times Hi		
xx	Lightning strike times Lo		
xx	Input 1 port total number Hi		
xx	Input 1 port total number Lo		
xx	Input 2 port total number Hi		

4-2-4 Read lightning strike record information

Query	
01	Slave address
03	Function
03	Starting address Hi
xx	Starting address Lo
xx(1)	No. register number Hi
06	No. register number Lo
xx	CRC check Lo
xx	CRC check Hi

Response			
01	Slave address	xx	Month
03	Function	xx	Date
00	Byte count	xx	Hour
xx	Nth lightning strikes Hi	xx	Minute
xx	Nth lightning strikes Lo	xx	Second
xx	Peak current integer part	xx(2)	Polarity
xx	Peak current decimal part	xx	CRC check Lo
xx	Year Hi	xx	CRC check Hi
xx	Year Lo		

(1) Convert xx here to decimal N, and read the Nth lightning strike record here.
(2) 00 means positive polarity, 01 means negative polarity.

4-2-5 Read the input port record

Query	
01	Slave address
03	Function
05	Starting address Hi
xx(1)	Starting address Lo
xx(2)	No. register number Hi
06	No. register number Lo
xx	CRC check Lo
xx	CRC check Hi

Response			
01	Slave address	xx	Month
03	Function	xx	Date
0A	Byte count	xx	Hour
xx(3)	Data 1 Hi	xx	Minute
xx	Trigger times Hi	xx	Second
xx	Trigger times Lo	xx	CRC check Lo
xx	Year Hi	xx	CRC check Hi
xx	Year Lo		

(1) 01 means query the record of input1, and 10 means read the record of input 2.
(2) Convert xx here to decimal N, and read the Nth lightning strike record here.
(3) 01 means return the record of input1, and 10 means return the record of input2.

4-2-6 Read language, sensor model and device serial number

Query	
01	Slave address
03	Function
06	Starting address Hi
00	tarting address Lo
00	No. register number Hi
05	No. register number Lo
xx	CRC check Lo
xx	CRC check Hi

Response			
01	Slave address	xx	8(3)
03	Function	xx(1)	Language
0E	Bytes count	xx(2)	Sensor
xx	1	00	None
xx	2	00	None
xx	3	00	None
xx	4	00	None
xx	5	xx	CRC check Lo
xx	6	xx	CRC check Hi
xx	7		

(1) means language is Chinese, 01 means language is English

(2) 00 means the sensor is LSCM-P1000, 10 means the sensor is LSCM-P300

(3) Device serial number have 16 digits, divide them into two-digit groups, from left to right is (1)~(8)

4-3 Write device information

4-3-1 Write output state

Query

01	Slave address	xx(1)	Data Lo
10	Function	xx	CRC check Lo
00	Starting address Hi	xx	CRC check Hi
00	Starting address Lo		
00	No. register number Hi		
01	No. register number Lo		
02	Byte count		
00	Data Hi		

Response

01	Slave address
10	Function
00	Starting address Hi
00	Starting address Lo
00	No. register number Hi
01	No. register number Lo
02	CRC check Lo
00	CRC check Hi

(1) 00 means turn off alarm output, 01means turn on alarm output.

4-3-2 Write the time in device

Query			
01	Slave address	xx	Month
10	Function	xx	Date
01	Starting address Hi	xx	Hour
00	Starting address Lo	xx	Minute
04	No. register number Hi	xx	Second
08	No. register number Lo	xx	Covering position
xx	Byte count	xx	CRC check Lo
xx	Year Hi	xx	CRC check Hi
xx	Year Lo		

Response	
01	Slave address
10	Function
01	Starting address Hi
00	Starting address Lo
00	No. register number Hi
04	No. register number Lo
C0	CRC check Lo
36	CRC check Hi

4-3-3 System restart

01	Slave address	02	Byte count
10	Function	00	Data Hi
03	Starting address Hi	00	Data Lo
00	Starting address Lo	xx	CRC check Lo
00	No. register number Hi	xx	CRC check Hi
01	No. register number Lo		

Annex : EMC test report

EMC TEST NRW

Test Report
No. P20-Z-00210-001

EMC TEST

Applicant
Citel Electronics GmbH
Feldstr.4
44867 Bochum

Equipment Under Test
Lightning and surge current counter
LSCM-D

EMC Test NRW GmbH
Emil-Figge-Straße 76
Phone: +49 (0)231 / 9742-750
Internet: www.emc-test.de
D – 44227 Dortmund
Fax: +49 (0)231 / 9742-755
E-mail: service@emc-test.de

Accredited / Recognized EMC Test Laboratory
The accreditations of EMC Test NRW GmbH are valid for the standards, specifications and directives listed in the scopes of the accompanying certificate of accreditation.

EMC TEST NRW

Test Report No. P20-Z-00210-001

Performing the tests: EMC Test NRW GmbH
Electromagnetic Compatibility
Emil-Figge-Straße 76
44227 Dortmund

Applicant: Citel Electronics GmbH
Feldstr.4
44867 Bochum

Project No: No. P20-Z-00210-001 [A21-Z-00399]

Type of project: EMC Test (see comments in chapter 2 also)

Test Specification: On customer request the tests are based on:

EN 61000-6-2:2019
Electromagnetic compatibility (EMC) - Part 6-2: Generic standards - Immunity for industrial environments

EN 61000-6-3:2007+A1:2011
Electromagnetic compatibility (EMC) - Part 6-3: Generic standards – Emission standard for residential, commercial and light-industrial environments

Equipment Under Test: Lightning and surge current counter LSCM-D

Manufacturer: See Applicant

Identification: See chapter 1.1

Date of Receipt: 31.05.2021

Documents: None

Test site: EMC Test NRW GmbH
Electromagnetic Compatibility
Emil-Figge-Straße 76
44227 Dortmund

Period of tests: 31.05./01./30.06.2021

Result: The results of the performed partial tests are given on the following pages.

Sign for the content of this report:
i.V. Marc Maarleveld
Management Projects

Sign for the realisation of test procedure:
i.A. Michael Plasecki
Project Responsibility

The test result is only valid for the equipment tested. A summary of the test report may be reproduced only when it is clearly stated that it is a summary, and the summary has been approved by EMC Test NRW in writing.

CITEL

France
Head Office
Sales department
Sèvres, France
Tel: +33 1 42 23 50 23
e-mail: contact@citel.fr
Web: www.citel.fr

Shanghai · China
Tel: +86 21 5812 2525
e-mail: info@citelsh.com
Web: www.citel.cn
Address: No.88,Shangke Road,
Zhangjiang Hi-Tech Park, Pudong,
Shanghai, China